Organisation intergouvernementale pour les transports internationaux ferroviaires
Zwischenstaatliche Organisation für den internationalen Eisenbahnverkehr
Intergovernmental Organisation for International Carriage by Rail

Commission d'experts techniques
Fachausschuss für technische Fragen
Committee of Technical Experts

1.12.2016

Original: EN

AMENDMENTS TO THE UTP WAG

Decisions to amend the UTP WAG

Status: IN FORCE

Tel. +41 (0) 31 359 10 10 Fax +41 (0) 31 359 10 11 info@otif.org Gryphenhübeliweg 30 CH - 3006 Bern

1. INTRODUCTION

COTIF provides technical and procedural rules according to which vehicles can be admitted to international traffic. Since 1 December 2012, the relevant COTIF rules related to freight wagons in the UTP WAG are fully equivalent to the EU rules in the WAG TSI. However, these rules are subject to periodic updates and in order to maintain equivalence between the EU and COTIF provisions the UTP for freight wagons needs to be amended.

2. EXPLANATION

The amendments in the annex reflect the following developments:

1. The revision of Appendices F and G to COTIF applicable as of 1 July 2015,

2. Amendments made to the WAG TSI, which concern in particular the amendments related to the introduction of the interoperability constituent: "Friction element for wheel tread brakes", the assessment methods for this IC, the validity of its examination certificates and the transitional provisions related to the new IC.

3. Amendments requested by the OTIF Contracting States expressed at the standing working group technology (WG TECH) meetings to further align the UTP and TSI, in particular in the field of axle traceability.

4. Editorial improvements and updates to legal references.

These amendments were reviewed and discussed at the 26th, 27th and 28th sessions of the WG TECH.

3. DECISIONS

The Committee of Technical Experts (CTE) adopts the following decisions:

1. The UTP WAG as last amended in accordance with the CTE decision of 10 June 2015 shall be modified in accordance with the amendments set out in the Annex to this document.

2. The OTIF Secretariat will notify the CTE's decision and the amendments concerned in accordance with the process described in Article 35 §§ 3 and 4 of the Convention[1].

3. The OTIF Secretariat will publish the amendments and a consolidated version of the UTP WAG on the OTIF website. The consolidated version will be for information only.

[1] This means that "the modifications shall enter into force for all Contracting States on the first day of the sixth month following that during which the Secretary General has given notice of them to the Member States".

Annex

1. The first paragraph of the UTP (following the words Freight wagons – (UTP WAG) is amended to read as follows:

"These regulations have been developed in accordance with the provisions of APTU, in particular Article 8, in the version as amended by the OTIF Revision Committee in 2009 and 2014, which entered into force on 1 July 2015. For definitions and terms, see also Article 2 of the version of ATMF (Appendix G) and Article 2 of the version of APTU (Appendix F) in force since 1 July 2015, both Appendices to the 1999 version of the COTIF Convention. Footnotes include both explanatory information (which is not part of the regulations), and references to other regulations."

2. The Section 0 is amended to read as follows:

"**0 EQUIVALENCE AND TRANSITIONAL PROVISIONS**

Following their adoption by the Committee of Technical Experts, the OTIF regulations included in this document are declared equivalent to the corresponding EU regulations within the meaning of Article 13 § 4 of APTU and Article 3a of ATMF, in particular with: ▪ The TSI for freight wagons Commission Regulation (EU) No 321/2013 of 13 March 2013 as last amended by Commission Regulations (EU) No 1236/2013 of 2 December 2013 and (EU) 2015/924 of 8 June 2015, hereinafter referred to as the WAG TSI.	
A UTP certificate of verification and a UTP declaration of verification of a vehicle [1] which is in conformity with the UTP WAG: 2012[2] shall be valid until the end of a transitional period of three years from 13 April 2013.	*([3])The declaration of verification and/or conformity to type of a new vehicle established in accordance with Decision 2006/861/EC shall be considered valid until the end of a transition period of three years after the entry into force of this Regulation.*
For Elements of Construction which are assessed separately from the subsystem in accordance with section 5.1 of this UTP: after a transitional period of one year from 1 January 2014, all newly produced and separately assessed ICs, "rear-end signal", shall be covered by the required declaration of conformity and/or suitability for use.	*([4])After a transition period of one year following the entry into force of this Regulation, newly produced interoperability constituents of "rear-end signal", shall be covered by the required EC declaration of conformity.*
	Article 8a([5])
Notwithstanding the provisions in section 6.3, the following transitional provisions apply to Elements of Construction corresponding to a "friction element for wheel tread brakes" (further referred to in	*1. Notwithstanding the provisions in Section 6.3 of the Annex, an EC certificate of verification may be issued for a subsystem containing components corresponding to the "friction element for wheel tread brakes"*

this paragraph as brake block) which are assessed separately from the subsystem:

brake blocks not certified in accordance with this UTP may be used on new, renewed or upgraded wagons if the brake block has already been used on a wagon which was admitted to international traffic in accordance with the UTPs, or authorised in at least one Member State of the EU, either before 1.7.2015, or before the expiry of the brake block's approval period under the following conditions:

- If the brake block was manufactured before 1.7.2015, it may be used until 30.6.2025.
- If the brake block was manufactured from 1.7.2015 onwards and its approval period had not expired when it was produced, it may be used up to 10 years after the expiry of its approval period.

The production, upgrade or renewal of the wagon shall be completed, including its admission to international traffic, before these transitional periods expire.

Until the expiry of their current approval period, the brake blocks listed in Appendix

interoperability constituent that does not have an EC declaration of conformity during a transition period of 10 years after the date of application of this Regulation, if the following conditions are met:

a) the component was manufactured before the date of application of this Regulation; and

b) the interoperability constituent has been used in a subsystem that had been approved and placed in service in at least one Member State before the date of application of this Regulation.

2. The production, upgrade or renewal of any subsystem using non-certified interoperability constituents shall be completed, including granting authorisation for placing in service of the subsystem, before the transition period set out in paragraph 1 expires.

Article 8c

1. Notwithstanding the provisions in Section 6.3 of the Annex, an EC certificate of verification may be issued for a subsystem containing components corresponding to the "friction element for wheel tread brakes" interoperability constituent that does not have an EC declaration of conformity during a transition period of 10 years after the expiry of the approval period of the interoperability constituent, if the following conditions are met:

a) the component was manufactured before the expiry of the approval period of the interoperability constituent; and

b) the interoperability constituent has been used in a subsystem that had been approved and placed in service in at least one Member State before the expiry of its approval period.

2. The production, upgrade or renewal of any subsystem using non-certified interoperability constituents shall be completed, including granting authorisation for placing in service of the subsystem, before the transition period set out in paragraph 1 expires.

Article 8b

1. Until the expiry of their current approval period, "friction element for wheel

G are deemed to comply with this UTP.	*tread brakes" interoperability constituents listed in Appendix G of the Annex do not need to be covered by an EC declaration of conformity. During this period, "friction elements for wheel tread brakes" listed in Appendix G of the Annex shall be deemed to be compliant with this Regulation.* *2. After their current approval period expires, "friction element for wheel tread brakes" interoperability constituents listed in Appendix G of the Annex shall be covered by EC declaration of conformity.*
	Article 9a
If a type or design of "friction element for wheel tread brakes" is assessed separately from the subsystem in accordance with this UTP, the corresponding type- or design examination certificate shall be valid for 10 years. During that period, new components of the same type or design may be used in a unit on the basis of a declaration of conformity that refers to this type or design examination certificate.	*The EC-type or EC design examination certificate for the "friction element for wheel tread brakes" interoperability constituent shall be valid for 10 years. During that period, new constituents of the same type may be placed on the market on the basis of an EC declaration of conformity that refers to this EC-type or EC design examination certificate.*
This UTP contains open points relating to technical compatibility with the infrastructure, so the conditions for free circulation in accordance with ATMF Article 6 § 3 are not met. For this reason, ATMF Article 6 § 4 applies to wagons meeting the conditions prescribed in sections 4, 5 and 6 of this UTP, but not meeting the conditions of section 7.1.2. However, if a vehicle also complies with the conditions prescribed in section 7.1.2 of this UTP, the open points are closed by means of particular technical solutions. Vehicles not subject to a specific case and meeting the conditions prescribed in section 7.1.2 meet the conditions of ATMF Article 3a § 2 and Article 6 § 3. [6]	*([7])*

"

3. The footnotes related to section 0 are amended to read as follows:

"[1] The validity of certificates and declarations referred to in this paragraph is indicated for the purpose of delivery of admission to operation according to Article 6 of ATMF

[2] A 94-02/3.2011

[3] Article 9 of Commission Regulation (EU) No 321/2013 enacting the WAG TSI

[4] Article 8(4) of Commission Regulation (EU) No. 1236/2013 amending the WAG TSI

[5] Articles 8a and 8c of Commission Regulation (EU) 2015/924 amending the WAG TSI

[6] Such a vehicle may circulate freely in accordance with ATMF Article 6 § 3. Compatibility with the infrastructure is ensured by the rail transport undertaking under its responsibility in accordance with ATMF Article 6 § 2.

[7] The EU provisions are set out in 2008/57/EC Articles 21 to 25."

4. The footnotes related to point 1.1 are amended to read:

" [8] Article 2 of Commission Regulation (EU) No. 321/2013 enacting the WAG TSI

[9] Article 3 of Commission Regulation (EU) No. 321/2013 enacting the WAG TSI"

5. Article 2: The third paragraph on the left-hand side column is amended to read as follows:

"The UTP Marking is applicable to the assignment of the Unique Vehicle Number for the purpose of vehicle registration."

6. Article 3, Table 1, Basic parameters and their correspondence to the essential requirements: after row 4.2.4.3.4 the following row 4.2.4.3.5 is inserted:

4.2.4.3.5	Friction elements for wheel tread brakes	1.1.1, 1.1.2, 1.1.3, 2.4.1				2.4.3

7. Article 3: the last sentence "The application of the present UTP does not ensure full compliance with these essential requirements." is deleted.

8. Point 4.2.1: the entire third paragraph starting with "Innovative solutions..." is deleted (until the next paragraph starting with "When the functional...").

9. Point 4.2.3.6.4: the text appearing in two columns is replaced by the following:

"The traceability of axles shall take into account the findings of the ERA Task Force on Freight Maintenance (see "Final report on the activities of the Task Force Freight Wagon Maintenance"

, version 1.0 of 5 October 2010,

published on the ERA website http://www.era.europa.eu)."

10. [deleted]

11. After point 4.2.4.3.4 a new point 4.2.4.3.5 is added:

"4.2.4.3.5. Friction elements for wheel tread brakes

The friction element for wheel tread brakes (i.e. brake block) generates brake forces by friction when engaged with the wheel tread.

If wheel tread brakes are used the characteristics of the friction element shall contribute reliably to achieving the intended brake performance.

The demonstration of conformity is described in point 6.1.2.5 of this

UTP.	TSI.

“

12. Point 4.5.3: the two columns containing the words “Maintenance plan” are converted to full width text.

13. Point 4.5.3: the two footnotes linked to the words “Maintenance plan”, which appeared over two columns, are replaced by one footnote linked to the remaining words Maintenance plan. The remaining footnote reads:

“The maintenance plan shall take into account the findings of the ERA Task Force on Freight Maintenance (see “Final report on the activities of the Task Force Freight Wagon Maintenance” published on the ERA website http://www.era.europa.eu)”

14. Point 4.8: the footnote linked to the title of point 4.8 is amended to read as follows:

“The full title of the section in the WAG TSI in accordance with Commission Regulation (EU) No 1236/2013 is “4.8 Parameters to be recorded in the technical file and European register of authorised types of vehicles” “

15. Point 4.8: a footnote is added at the end of the last paragraph on the right-hand side which reads:

“OJ L 264, 8.10.2011, p.32.”

16. Point 5.2 is amended to read as follows:

“As stated in

Sections 6.1.3 of the present UTP	Article 10a ,

innovative solutions may require new specifications and/or new assessment methods. Such specifications and assessment methods shall be developed using the process described in point 6.1.3 whenever an innovative solution is envisaged for an IC”

17. Point 5.2: a new footnote is added which is linked to the text “Article 10a” on the right hand side, the footnote reads :

“Article 10a of the Commission Regulation (EU) 2015/924 amending the WAG TSI”

18. After point 5.3.4 a new point 5.3.4a is added, which reads:

“5.3.4a. *Friction elements for wheel tread brakes*

Friction element for wheel tread brakes. The friction element for wheel tread brakes shall be designed and assessed for an area of use defined by:

– dynamic friction coefficients and their tolerance bands,

– minimum static friction coefficient,

– maximum permitted brake forces applied on the element,

– suitability for train detection by systems based on track circuits,

– suitability for severe environmental conditions.

A friction element for wheel tread brakes shall comply with the requirements defined in point 4.2.4.3.5. These requirements shall be assessed at IC level."

19. Point 6.1.1: at the end of Table 8 Assessment procedures for the verification of elements of construction, the following Module (row) CV is added:

Module CV	Type validation by in-service experience (suitability for use)

20. Point 6.1.2: in the left-hand column, after the first paragraph the following two sentences are added:

"In case of conformity assessment of an IC as part of the subsystem, the compliance of the IC with the applicable provisions is verified by applying the modules for subsystem in accordance with section 6.2 of this UTP.

ICs for which module CV applies shall be assessed separately from the subsystem."

21. Point 6.1.2, Table 9 Assessment procedures for the verification of elements of construction, after row 4.2.3.6.4 the following row 4.2.4.3.5 is added:

4.2.4.3.5	Friction elements for wheel tread brakes	X(*)	X	X	X(*)	X	X(**)

22. Point 6.1.2, under the existing explanation concerning table 9, the following explanation is added:

"(**) Module CV shall be used in case the manufacturer of friction element for wheel tread brakes has no sufficient return of experience (according to its own judgment) for the proposed design."

23. After point 6.1.2.4 a new point 6.1.2.5 is added:

"6.1.2.5. Friction elements for wheel tread brakes

The demonstration of conformity of friction elements for wheel tread brakes shall be carried out by determining the following friction element properties in accordance with

Appendix O:	the European Railway Agency (ERA) technical document ERA/TD/2013-02/INT version 2.0 of XX.XX.2014 published on the ERA website (http://www.era.europa.eu):

– dynamic friction performance (chapter 4);

– static friction coefficient (chapter 5);

– mechanical characteristics including properties in respect to shear strength test and flexural strength test (chapter 6).

Demonstration of the following suitabilities shall be carried out in accordance with chapters 7 and/or 8 of

Appendix O,	the ERA technical document ERA/TD/2013-02/INT version 2.0 of XX.XX.2014 published on the ERA website (http://www.era.europa.eu),

if the friction element is intended to be suitable for:

- train detection by systems based on track circuits; and/or
- severe environmental conditions.

If a manufacturer does not have sufficient return of experience (according with its own judgement) for the proposed design, the type validation by in-service experience procedure (module CV) shall be part of the assessment procedure for suitability for use. Before commencing in-service tests, a suitable module (CB or CH1) shall be used to certify the design of the interoperability constituent.

The in-service tests shall be organised on request from the manufacturer, who must obtain agreement from a railway undertaking that will contribute to such an assessment.

The suitability for train detection by systems based on track circuits for friction elements intended to be used in subsystems beyond the scope set out in chapters 7 of

Appendix O,	the ERA technical document ERA/TD/2013-02/INT version 2.0 of XX.XX.2014 published on the ERA website (http://www.era.europa.eu),

may be demonstrated using the procedure for innovative solutions described in point 6.1.3.

The suitability for severe environmental conditions by a dynamometer test for friction elements intended to be used in subsystems beyond the scope set out in clause 8.2.1 of

Appendix O,	the ERA technical document ERA/TD/2013-02/INT version 2.0 of XX.XX.2014 published on the ERA website (http://www.era.europa.eu),

may be demonstrated using the procedure for innovative solutions described in point 6.1.3."

24. Point 6.1.3 is amended to read as follows:

"6.1.3. Innovative solutions

If an innovative solution

is proposed for an element of construction,	referred to in Article 10a is proposed for an interoperability constituent,

the manufacturer or his authorised representative

	established within the Union

shall apply

mutatis mutandis the procedure set out in clause 6.2.3 of this UTP.	the procedure set out in Article 10a.

”

25. Point 6.2.1: in the footnote relating to the to the concept ‘functional subsystems’ in the first sentence, the wording: “... Appendix PP, ...” is replaced by: “... UTP Marking, ...”.

26. Point 6.2.2.3 after the first paragraph the two following paragraphs are amended to read as follows:

“As an alternative to performing on-track tests on two different rail inclinations, as set out in clause 5.4.4.4 in EN 14363:2005, tests may be carried out on only one rail inclination if it is demonstrated that the tests cover the range of contact conditions as set out in section 1.1. of

Appendix B.	ERA technical document ERA/TD/2013/01/INT version 1.0 of 11.02.2013 published on the ERA website (http://www.era.europa.eu).

When an on-track test with normal measuring method is required the unit shall be assessed against the limit values set out in

Appendix B, sections 1.2 and 1.3.	sections 1.2 and 1.3 of ERA technical document ERA/TD/2013/01/INT version 1.0 of 11.02.2013 published on the ERA website (http://www.era.europa.eu).

”

27. Point 6.2.3 is amended to read as follows:

“6.2.3. Innovative solutions

If an innovative solution

	referred to in Article 10a

is proposed for the “Rolling stock – freight wagons” subsystem, the applicant shall apply the procedure set out

below:	in Article 10a
In order to keep pace with technological progress, innovative solutions may be required that do not comply with the specifications set out in this UTP or for which the assessment	

methods set out in this UTP cannot be applied. In that case, new specifications and/or new assessment methods associated with those innovative solutions shall be developed.

2. Innovative solutions may be related to the "rolling stock — freight wagons" subsystem, its parts and its elements of construction.

3. If an innovative solution is proposed, the manufacturer or his authorised representative shall declare how it deviates from or complements the relevant provisions of this UTP and shall submit the deviations to the Secretary General for analysis.

The Secretary General will coordinate its opinion with the EU and the European Railway Agency on the proposed innovative solution and submit its opinion to the Committee of Technical Experts (CTE).

4. If the CTE supports the opinion, the appropriate functional and interface specifications and the assessment method, which must be included in the UTP in order to allow the use of this innovative solution, shall be developed in coordination with the EU and subsequently integrated in the UTP during the revision process

5. Pending the revision of the UTP, the positive CTE opinion shall be considered as acceptable means of compliance with the essential requirements of UTP GEN-A and may therefore be used for the assessment of the subsystem. Pending the revision of the UTP, the positive CTE opinion shall be considered as acceptable means of compliance with the essential requirements of UTP GEN-A and may therefore be used for the assessment of the subsystem.

"

28. Point 6.2.3: a new footnote is added, linked to the first appearance of the text "Article 10a" in the right hand column. The new footnote reads:

"Article 10a of the Commission Regulation (EU) 2015/924 amending the WAG TSI"

29. Point 6.3: in the second indent the wording: "- put in service in at least one", is amended to read:

" - placed in service in at least one".

30. Point 7.1.2 letter j): the second sentence: "If the brake system...used." is deleted.

31. Appendix A: the last row of the Table A.1 is deleted.

32. Appendix C, point 5: after the second paragraph ending with the text "...may receive the marking "GE"", the following paragraph is added:

"Wagons of the existing fleet which have been authorised in the EU in accordance with • Commission Decision 2006/861/EC as amended by Decision 2009/107/EC or with • Decision 2006/861/EC as amended by Decisions 2009/107/EC and 2012/464/EU and meeting the conditions set out in point 7.6.4 of Decision 2009/107/EC, Or which have been admitted to operation in accordance with • UTP WAG with reference A 94-02/3.2011 of 1.12.2012 and meeting the conditions set out in point 7.6.4 of that UTP, may receive this marking "GE" without any additional third party assessment or new admission to operation. The use of this marking on wagons in operation remains under the responsibility of the railway undertakings. "	*Wagons of the existing fleet which have been authorised in accordance with Commission Decision 2006/861/EC as amended by Decision 2009/107/EC or with Decision 2006/861/EC as amended by Decisions 2009/107/EC and 2012/464/EU and meeting the conditions set out in point 7.6.4 of Decision 2009/107/EC may receive this marking "GE" without any additional third party assessment or new authorisation for placing in service. The use of this marking in wagons in operation remains under the responsibility of the railway undertakings.*

33. Appendix C, point 5, at the beginning of the new right hand column, a new footnote is added that reads:

"Article 3(c) of Commission Regulation (EU) No 321/2013 enacting the WAG TSI"

34. Appendix C, point 9, letter (l) is amended to read as follows:

"(l) If the brake system requires a "friction element for wheel tread brakes" interoperability constituent, the interoperability constituent shall, in addition to the requirements of point 6.1.2.5, comply with UIC leaflet 541-4:2010. The manufacturer of the friction element for wheel tread brakes, or his authorised representative established within the Union, shall in that case obtain the UIC approval."

35. Appendix C, point 14 is amended to read as follows:

"The brake system shall resist a thermal load equivalent to the suggested reference case in point 4.2.4.3.3.

With regard to the use of wheel tread brake systems this condition is deemed to be met, if the "friction elements for wheel tread brakes" interoperability constituent is, in addition to the requirements of point 6.1.2.5, compliant with UIC leaflet 541-4:2010, and if the wheel:

– is assessed in accordance with point 6.1.2.3 and

– fulfils the conditions of Section 15 of Appendix C."

36. Appendix D, first table, after the row "Parking brake" the following row is added:

Friction elements for wheel tread brakes	4.2.4.3.5	-	-
	6.1.2.5	ERA technical document ERA/TD/2013-02/INT version 2.0 of XX.XX.2014	All

37. Appendix D, second table: in the row "Manual coupling system" in the column "Standard/UIC leaflet", the cell "6.2, 6..3.2" is amended to read as follows:

6.2, 6.2.3.1

38. Appendix D, second table, in the row "UIC brake" in the column "Standard/UIC leaflet", below the cells "UIC leaflet 542:2010" and "all" the following cells are added:

UIC 541-4:2010	All

39. Appendix E: the first sentence in point 1 is amended to read as follows:

"The colour of tail lamps shall be in accordance with clause 5.5.3 of EN 15153-1:2013."

40. Appendix F, table F.1, after the row "Wheel slide protection (WSP)" the following row is added:

Friction elements for wheel tread brakes	4.2.4.3.5	X	X	X	6:1:2:5

41. Appendix I, the first footnote in the right-hand column is amended to read as follows:

"The corresponding EU requirements are set out in Decision 2012/757/EC (OPE TSI) as last amended by Commission Regulation (EU) 2015/995 of 8th of June 2015"

42. Appendix I: point (4.6.3.2.3.2.) in the right-hand column is deleted.

43. Appendix I: point (4.2.2.5.) in the right-hand column is amended to read as follows:

"(4.2.2.5.) The railway undertaking must define the rules and procedures to be followed by his staff so as to ensure that the train is in compliance with the allocated path.

Train composition requirements must take into account the following elements:

(a) the vehicles

— all vehicles in the train must be in compliance with all the requirements applicable on the routes over which the train will run;

— all vehicles on the train must be fit to run at the maximum speed at which the train is scheduled to run;

(b) all vehicles on the train must be currently within their specified maintenance interval and will remain so for the duration (in terms of both time and distance) of the journey being undertaken;

(c) the train

— the combination of vehicles forming a train must comply with the technical constraints of the route concerned and be within the maximum length permissible for forwarding and receiving terminals.

(d) the railway undertaking is responsible for ensuring that the train is technically fit for the journey to be undertaken and remains so throughout the journey

(e) the weight and axle load

(f) the weight of the train must be within the maximum permissible for the section of route, the strength of the couplings, the traction power and other relevant characteristics of the train. Axle load limitations must be respected.

(g) the maximum speed of the train

— the maximum speed at which the train can run must take into account any restrictions on the route(s) concerned, braking performance, axle load and vehicle type.

(h) the kinematic envelope

(i) the kinematic gauge of each vehicle (inclusive of any load) in the train must be within the maximum permissible for the section of route.

Additional constraints may be required or imposed due to the type of braking regime or traction type on a particular train."

44. Appendix I, point (4.2.2.6.2.) in the right-hand column is amended to read as follows:

"(4.2.2.6.2.) Braking performance and maximum speed allowed

(1) The infrastructure manager shall provide the railway undertaking with all relevant line characteristics for each route:

- *signalling distances (warning, stopping) containing their inherent safety margins,*
- *gradients,*
- *maximum permitted speeds, and*
- *conditions of use of braking systems possibly affecting the infrastructure such as*

magnetic, regenerative and eddy-current brake.

(2) Additionally, the infrastructure manager may provide the following information:

(i) for trains able to run at a maximum speed higher than 200 km/h, deceleration profile and equivalent response time on level track;

(ii) for trainsets or for fixed train compositions, unable to run at a maximum speed higher than 200 km/h, deceleration (as above in (i)) or brake weight percentage;

(iii) for other trains (variable compositions of trains unable to run at a maximum speed higher than 200 km/h): brake weight percentage.

If the infrastructure manager provides the abovementioned information, it shall be made available to all RUs who intend to operate trains on its network. The braking tables already in use and accepted for the existing lines at the date of entry into force of the present regulation shall also be made available.

(3) The railway undertaking shall, in the planning stage, determine the braking capability of the train and corresponding maximum speed taking into account:

- *the relevant line characteristics as expressed in point (1) above or, if available, the information provided by the infrastructure manager in accordance to point (2) above. If the infrastructure manager has provided the information of point (2), the railway undertaking has to express the braking capability by using the same information, and*
- *the rolling-stock-related margins derived from reliability and availability of the braking system. EN L 165/24 Official Journal of the European Union 30.6.2015.*

Furthermore, the railway undertaking shall ensure that during operation each train achieves at least the necessary braking performance. The railway undertaking shall set up and implement corresponding rules and shall manage them within its safety management system.

In particular the railway undertaking has to set up rules to be used if a train does not reach the necessary braking performance during

operation. In this case, the railway undertaking must immediately inform the infrastructure manager. The infrastructure manager may take appropriate measures to reduce the impact on the overall traffic on its network."

45. A new Appendix O is added, which reads as follows:

"**Appendix O Conformity assessment of friction elements for wheel tread brakes**

This appendix is a transcription of the ERA technical document ERA/TD/2013-02/INT version 2.0 of 15.12.2014 published on the ERA website and as referred to in the WAG TSI. It appears in full width in order to keep the drawings and tables readable.

1. INTRODUCTION

The present document provides the necessary specifications to perform the assessment of conformity of friction elements for wheel tread brakes. It is referred to in point 6.1.2.5 and Appendix D of the technical specification for interoperability relating to the subsystem 'rolling stock – freight wagons' following its amendment related to 'friction elements for wheel tread brakes' (ready for adoption in 2015).

The present document is based on FprEN 16452: Railway applications - Braking - Brake blocks, dated March 2014.

2. TERMS AND DEFINITIONS

For the purposes of this document the following terms and definitions apply.

Bg arrangement: arrangement with one friction element per friction element holder

Bgu arrangement: arrangement with two friction elements per friction element holder

1Bg: unilateral configuration with one friction element per friction element holder

2Bg: bilateral configuration with one friction element per fiction element holder

1Bgu: unilateral configuration with two friction elements per friction element holder

2Bgu: bilateral configuration with two friction elements per friction element holder

friction element: stator part of a tread brake adapted to generate a friction force when engaged with a wheel tread

friction element force: force with which the friction element is made to come into contact with the wheel tread

friction element back plate: element onto which the friction element is fixed, acting as the interface between the friction element and friction element holder

friction material: consumable portion of the friction element that acts on the wheel tread in order to provide the specified brake performance

size of friction element:	product of height and width of the friction element without any correction for grooves
instantaneous friction coefficient:	value of friction coefficient at any one instant
mean friction coefficient:	value of instantaneous friction coefficient integrated over distance
dynamic friction coefficient:	coefficient of friction achieved by the friction material during relative movement between the friction material surface and wheel tread
static friction coefficient:	coefficient of friction achieved by the friction material at the point where relative movement between the friction material surface and wheel tread starts to take place
parking brake:	brake used to prevent a stationary train from moving under specified conditions, until intentionally released (also called 'immobilization braking')
wheel tread temperature:	average temperature out of three values measured by three rubbing thermocouples spaced equally across the wheel tread

3. ABBREVIATIONS

m	[t]	Mass to be braked per wheel for design mass (including rotating mass) in conformity with EN 15663
m_1	[t]	Mass m in working order
m_2	[t]	Mass m under normal payload
m_{1W}	[t]	Mass m in working order divided by the number of wheels
F_B	[kN]	Nominal brake application force per wheel
F_{B1}	[kN]	Total friction element application force per wheel for braked mass m_1
F_{B2}	[kN]	Total friction element application force per wheel for braked mass m_2
F_b	[kN]	Instantaneous application force per wheel
F_{PB}	[kN]	Parking brake application force
v	[km/h]	Theoretical initial speed at the brake application initiation
v_m	[km/h]	Maximum service speed
μ_a	[-]	Instantaneous friction coefficient determined at every instance of the braking by the ratio between the total brake force F_{tR} and the total application force F_b
μ_m	[-]	Mean friction coefficient determined from reaching 95 % of the nominal application force F_B of the instantaneous friction coefficient μ_a for the stopping distance s_2
μ_{dyn}	[-]	Dynamic friction coefficient
μ_{stat}	[-]	Static friction coefficient
Θ_0	[°C]	Mean initial temperature of the wheel tread at the beginning of the brake application
s_1	[m]	Stopping distance from beginning of the brake application to rest
s_2	[m]	Stopping distance from the moment on when $F_b = 0.95\ F_B$ to rest
D	[mm]	Diameter of wheel
P	[-]	Brake type – P = passenger

4. DYNAMIC FRICTION COEFFICIENT

4.1 Test program

The dynamometer test program for friction elements for wheel tread brakes to determine the dynamic friction coefficient μ_{dyn} is set out in table 1. The corresponding terms, definitions and abbreviations are explained in sections 2 and 3.

Table 1: Dynamometer test program to determine the dynamic friction coefficient

Friction element arrangement	To be defined by the applicant
Wheel type	In conformity with EN 13979-1
Wheel diameter	∅ X ± 5 mm last machining size before wheel is fully worn in accordance with EN 13979-1
Water flow rate	X l/h (without specific requirements 14 l/h should be used)

No. of brake application	**Initial speed**	**Total F_B per wheel**	**Initial temp.**	**Mass to brake per wheel**	**Weighing after**	**Remarks**
	v	F_B	Θ_0	m		
	[km/h]	**[kN]**	**[°C]**	**[t]**	**No.**	
1.1 - 1.X	$3/4\ v_m$	2/3 F_{B2}	20-100	m_2	1.X	Brake applications to rest under dry conditions to allow bedding of the friction elements up to at least 85 % of the friction element surface
1 2 3 4 5 6	$3/4\ v_m$ v_m	F_{B2}	50-60	m_2		Brake applications to rest under dry conditions, after a period of cooling
7 to 26	$3/4\ v_m$	2/3 F_{B1}	20-100	m_1		Conditioning stops
27 28 29 30 39 40 41 42	$3/4\ v_m$ $1/4\ v_m$ v_m $1/2\ v_m$	2/3 F_{B1}	50-60	m_1		Brake applications to rest under dry conditions, after a period of cooling
31 32 33 34 43 44 45 46	$3/4\ v_m$ $1/4\ v_m$ v_m $1/2\ v_m$	1/3 F_{B1}	50-60	m_1		Brake applications to rest under dry conditions, after a period of cooling
35 36 37 38 47 48 49 50	$3/4\ v_m$ $1/4\ v_m$ v_m $1/2\ v_m$	F_{B1}	50-60	m_1		Brake applications to rest under dry conditions, after a period of cooling
51	$3/4\ v_m$	-	-	-		10 kW drag brake application for a period of 15 min in dry condition done immediately after brake nº 50 without interruption. This is to evenly distribute the residual stress within the wheel

No. of brake application	Initial speed	Total F_B per wheel	Initial temp.	Mass to brake per wheel	Weighing after	Remarks
	v	F_B	Θ_0	m		
	[km/h]	[kN]	[°C]	[t]	No.	
52 64 76 53 65 77 54 66 78 55 67 79	$3/4\ v_m$ $1/4\ v_m$ v_m $1/2\ v_m$	2/3 F_{B1}	20-30	m_1		Brake applications to rest under wet conditions, after a period of cooling
56 68 80 57 69 81 58 70 82 59 71 83	$3/4\ v_m$ $1/4\ v_m$ v_m $1/2\ v_m$	1/3 F_{B1}	20-30	m_1		Brake applications to rest under wet conditions, after a period of cooling
60 72 84 61 73 85 62 74 86 63 75 87	$3/4\ v_m$ $1/4\ v_m$ v_m $1/2\ v_m$	F_{B1}	20-30	m_1		Brake applications to rest under wet conditions, after a period of cooling
88 92 89 93 90 94 91 95	$3/4\ v_m$ $1/4\ v_m$ v_m $1/2\ v_m$	F_{B2}	20-30	m_2		Brake applications to rest under wet conditions, after a period of cooling
96	$3/4\ v_m$	-	-	-	*96*	10 kW drag brake application for a period of 15 min in dry condition done immediately after brake nº 95 without interruption to dry the friction element
97 109 98 110 99 111 100 112	$3/4\ v_m$ $1/4\ v_m$ v_m $1/2\ v_m$	2/3 F_{B2}	50-60	m_2		Brake applications to rest under dry conditions, after a period of cooling
101 113 102 114 103 115 104 116	$3/4\ v_m$ $1/4\ v_m$ v_m $1/2\ v_m$	1/3 F_{B2}	50-60	m_2		Brake applications to rest under dry conditions, after a period of cooling
105 117 106 118 107 119 108 120	$3/4\ v_m$ $1/4\ v_m$ v_m $1/2\ v_m$	F_{B2}	50-60	m_2		Brake applications to rest under dry conditions, after a period of cooling
121 122 123 124	$3/4\ v_m$ $1/4\ v_m$ v_m $1/2\ v_m$	F_{B2}	110-120[a]	m_2		Brake applications to rest under dry conditions with high initial temperature, after a period of cooling
125 126 127 128	$3/4\ v_m$ $1/4\ v_m$ v_m $1/2\ v_m$	2/3 F_{B2}	*50*-60	m_2	128	Brake applications to rest under dry conditions, after a period of cooling
129	$3/4\ v_m$	-	20-60	-		Simulation of a downhill brake application with a power of 45 kW for a period of 34 min

No. of brake application	Initial speed	Total F_B per wheel	Initial temp.	Mass to brake per wheel	Weighing after	Remarks
	v	F_B	Θ_0	m		
	[km/h]	[kN]	[°C]	[t]	No.	
130	$3/4\ v_m$	F_{B2}	-	m_2		Brake application to rest under dry conditions immediately after the simulation of a downhill brake application, without any cooling break
131 to 140	v_m	$2/3\ F_{B2}$	50-60	m_2		Conditioning stops
141 142 143 144 145 146 147 148	$3/4\ v_m$ $1/4\ v_m$ v_m $1/2\ v_m$	F_{B2}	50-60	m_2	148	Brake applications to rest under dry conditions, after a period of cooling
149	$3/4\ v_m$	-	-	-		10 kW drag brake application for a period of 10 min in dry condition done immediately after brake nº 148 without interruption. This is to evenly distribute the residual stress within the wheel

[a] If the temperature obtained during stop numbers 120 and 122 is below 110 °C, stop numbers 121 and 123 shall be performed with the temperature achieved at the time.

During the tests described in table 1 the following conditions shall be respected:

- The speed and ventilation conditions shall be as set out in table 2.

Table 2: Speed and ventilation conditions

	Speed simulated on the test bench [km/h]		Speed of the cooling air [km/h]	
	Under dry conditions	**Under wet conditions**	**Under dry conditions**	**Under wet conditions**
During braking at v ≤ 80km/h v > 80km/h	 v v	 v v	 v/2 40	 10 10
Between the brake applications	100	50	40	10

- The time to reach 95 % of the demanded F_B shall be 4 s ± 0,2 s.
- During bedding-in the following minimum numbers of brake stops shall be carried out: 40 for organic friction elements and 80 for sintered friction elements.
- If interruptions of the test program occur, before recommencing the program the previous 5 stops shall be repeated. In this case the initial temperature for the first stop shall be in the range from 20 °C to 60 °C.
- In the case of an interruption prior to the first wet stop, one brake application identical to the last brake application under dry conditions shall be carried out outside of the program.

- Concerning the brake applications under wet conditions, the wheel wetting shall not be interrupted during each entire set of stops under wet conditions (including cooling period). For any first stop under wet conditions after a stop under dry conditions, the start of the wheel tread wetting shall take place only when the temperature of the wheel tread is below 80 °C.
- During the test under wet conditions the water shall be equally distributed over the wheel tread.
- During the simulation of a downhill the chosen power and speed shall be kept constant.

4.2 Values to be determined in order to define the area of use

The values for the following parameters shall be determined and recorded within the area of use:

a) Tested configuration consisting of

- friction element arrangement
- wheel type
- nominal and tested wheel diameter

b) Mean dynamic friction coefficient of non-bedded and bedded state. The mean dynamic friction coefficient of the non-bedded and bedded state are defined as the average of the first 5 and the last 5 measured values of brake application n° 1.1 to 1.X.

c) Mean dynamic friction coefficient under dry conditions versus the initial operating speed v for the different brake forces F_B applied and the mass to brake per wheel m using the template diagrams set out in table 3.

Table 3: Template diagrams and allocated brake application n°

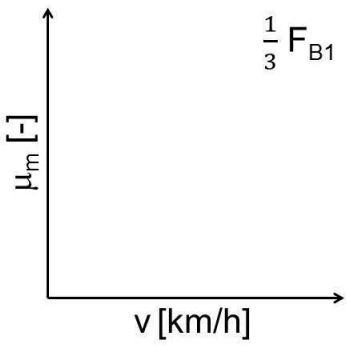	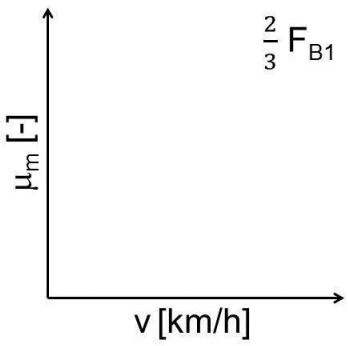	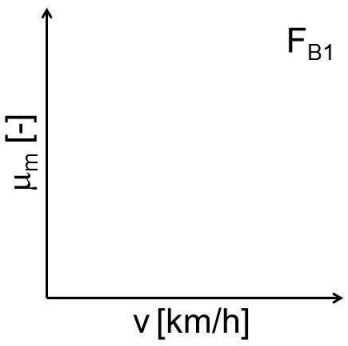
Brake application n° 31 to 34 and 43 to 46	Brake application n° 27 to 30 and 39 to 42	Brake application n° 35 to 38 and 47 to 50
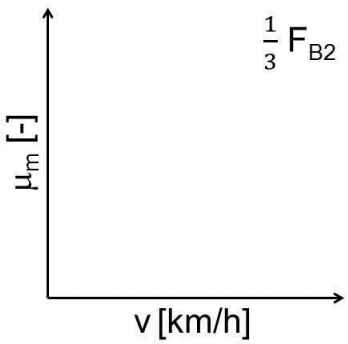	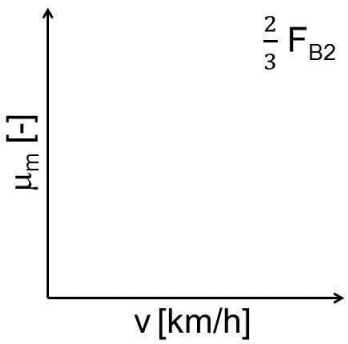	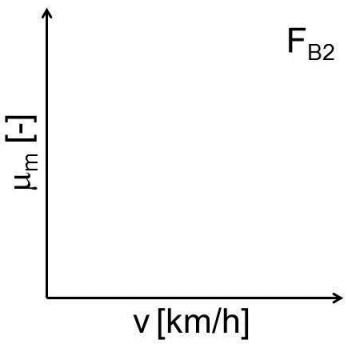

Brake application n° 101 to 104 and 113 to 116	Brake application n° 97 to 100 and 109 to 112	Brake application n° 105 to 108 and 117 to 120

d) Mean dynamic friction coefficient variation under wet conditions. The variation shall be expressed as the averages of the measured mean dynamic friction coefficients under wet conditions (brake application n° 52 to 95) in proportion to the corresponding averages of mean dynamic friction coefficients under dry conditions (brake application n° 27 to 50, 105 to 108 and 117 to 120). Example: the average value of brake applications n° 57, 69 and 81 divided by the average value of brake applications n° 32 and 44.

e) Mean dynamic friction coefficient variation at high initial temperature. The variation shall be expressed as the mean dynamic friction coefficients at a wheel tread temperature above 110 °C (brake application n° 121 to 124) in proportion to the corresponding mean dynamic friction coefficients at a wheel tread temperature below 60 °C (brake application n° 125 to 128). Example: The value of brake application n° 122 divided by the value of brake applications n° 126.

f) Chart of the instantaneous dynamic friction coefficient and wheel tread temperature versus time of brake application n° 129.

g) Mean dynamic friction coefficient variation after simulation of a downhill brake application. The variation shall be expressed as the averages of the measured mean dynamic friction coefficients after downhill braking (brake application n° 141 to 148) in proportion to the corresponding averages of mean dynamic friction coefficients before downhill braking (brake application n° 105 to 108 and 117 to 120). Example: the average value of brake applications n° 142 and 146 divided by the average value of brake applications n° 106 and 118.

In relation to the characteristics described in this chapter, in case the manufacturer chooses to apply some of the harmonised acceptance criteria for dynamic friction performance as specified in FprEN 16452:2014, the compliance to these harmonised acceptance criteria have to be stated in the technical documentation as part of the area of use of the fiction element for wheel tread brakes.

5. STATIC FRICTION COEFFICIENT

5.1 Test program

The dynamometer test program to determine the static friction coefficient μ_{stat} of friction elements for wheel tread brakes is set out in table 4. The corresponding terms, definitions and abbreviations are explained in sections 2 and 3.

Table 4: Dynamometer test program to determine the static friction coefficient

Friction element configuration	To be defined by the applicant				
Wheel type	In conformity with EN 13979-1				
Wheel diameter	Ø X ± 5 mm last machining size before wheel is fully worn in accordance with EN 13979-1				
No. of brake application	**Initial speed**	**Parking brake application force**	**Initial temp.**	**Mass to brake per wheel**	**Remarks**
	v	F_{PB}	Θ_0	m	
	[km/h]	**[kN]**	**[°C]**	**[t]**	

R.1 - R.X	v_m	2/3 F_{PBmax}	20-100	m_2	Brake applications to rest under dry conditions to allow bedding of the friction elements up to a contact pattern of 100 % is reached
1 to 5 6 to 10 *11* to 15 16 *to* 20	-	*1/4* F_{PBmax} *1/2* F_{PBmax} *3/4* F_{PBmax} F_{PBmax}	< 30	-	-

During the test described in table 4 the following conditions shall be respected:

- The wheel tread hollow wear at the start of the test shall not exceed 1 mm. The state of the surface of the wheel tread shall be documented in the test report.
- The torque shall be continuously increased. The start of the rotation shall occur between 0,3 s and 2,0 s after the beginning of the build-up of the rotating torque.
- The relative movement between wheel and friction element shall be measured with an accuracy of at least 30 milliradian. It shall be ensured that displacements due to clearances are excluded.

For each brake application (n° 1 to 20) the static friction coefficient shall be determined which is the value of the instantaneous friction coefficient at the time corresponding to the commencement of sliding (mean value calculated from the measurement records for the intersection between the linearised characteristic line of the rotation angle and the time axis) as described in figure 1.

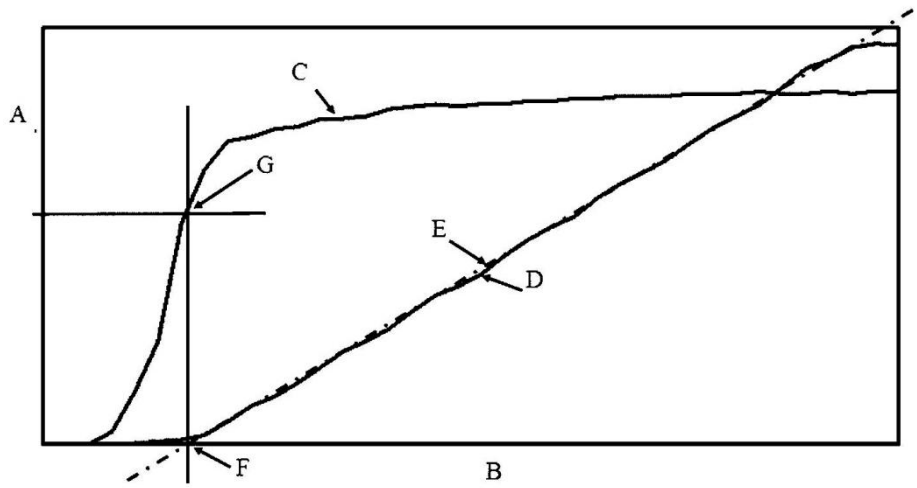

Key

A	friction coefficient (μ) / rotation angle of wheel
B	time axis
C	example of friction coefficient curve
D	rotation angle of wheel
E	straight regression line
F	intersection between straight regression line and time axis
G	value of static coefficient

Figure 1: Principles for the determination of the static friction coefficient

5.2 Values to be determined in order to define the area of use

For each force the average value of the 5 measurements shall be determined. The lowest average value is the characterising static friction coefficient.

6. MECHANICAL CHARACTERISTICS

The mechanical characteristics of the assembly between back plate and friction element for wheel tread brakes shall be tested in accordance with the test procedures set out in sections 6.1 and 6.2.

6.1 Shear strength

The test shall be performed with the mounting as set out in figure 2. In the case of a friction element consisting of two parts or a mono-bloc friction element with a central groove, a wedge (g) shall be placed in the central groove as shown.

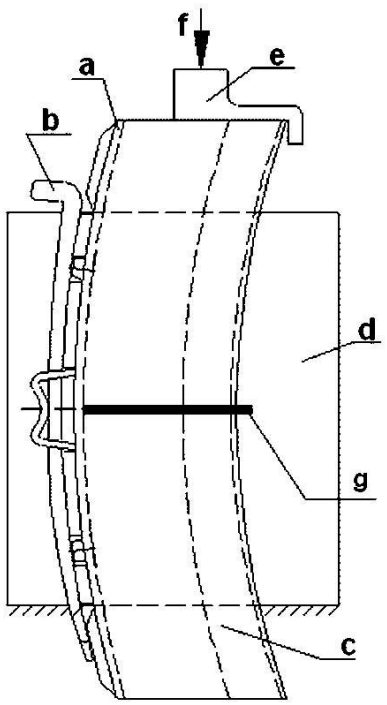

Key

a brake shoe insert back plate

b brake shoe insert fixing key

c friction element

d side panel

e force application fixing

f test force F_{test}

g brake shoe insert groove filling device

Figure 2: Shear strength test mounting arrangement

The test force F_{test} shall be applied in a continuous and progressive way up to 1.5 times the maximum permissible braking force applied at one friction element within 4 s and shall be kept for a period of at least 2 min.

At the end of the test there shall not be any indication of detachment of the back plate from the friction element or any other visible mechanical damage.

6.2 Flexural strength

Two tests shall be performed, one with the mounting 1 and one with the mounting 2 as set out in figure 3. The end of the supports shall have a radius of 5 mm. For both tests new friction elements shall be used and the test force F_{test} shall be applied five times. F_{test} is the maximum permissible application force applied at one friction element.

The following distances shall be respected:

- Ls 1 = friction element length - 50 mm.
- Ls 2 = half friction element length - 50 mm.

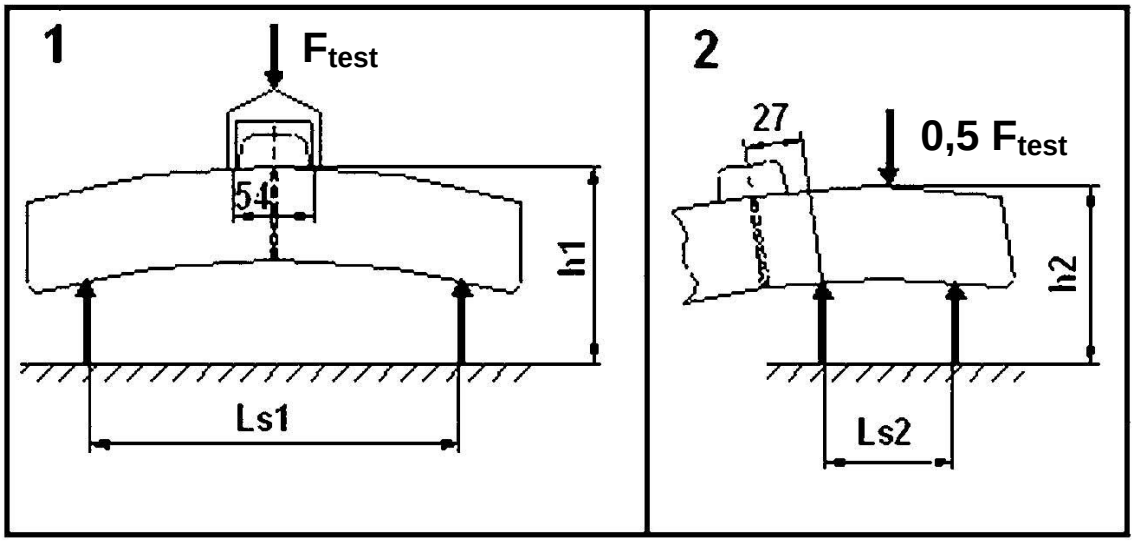

Key

1 mounting for performing test n°1

2 mounting for performing test n°2

Figure 3: Flexural strength test mounting arrangement

Within 4 s the test force shall be applied progressively until either the maximum test force F_{test} is achieved or the maximum displacement Δh1 respectively Δh2 for the intended application occurs taking into account the nominal geometry of a new friction element and a new wheel.

The force respectively the displacement shall be kept for a period of at least 2 minutes.

At the end of the test, the friction element shall not show any crack initiation or fracture of the back plate. In the case of a friction element that has a groove or slot as shown in figure 3 cracking is permitted in the area where the friction element is at its thinnest where the groove meets the back plate.

7. SUITABILITY FOR TRAIN DETECTION BY SYSTEMS BASED ON TRACK CIRCUITS

The following rig test to demonstrate the suitability for train detection by systems based on track circuits is only applicable if the friction element is intended to be used in subsystems which fall under the following scope:

- Nominal wheel diameters of 680 mm to 920 mm
- Friction element configurations 1Bg, 1Bgu, 2Bg and 2Bgu
- Mass per wheel ≥ 1.8 t

Cast iron brake blocks are deemed to be suitable for train detection by systems based on track circuits.

7.1 Test program

A number of 10 friction element samples of a given size as set out in clause 7.1.3 shall be subject to the test program provided in figure 4 and further described in clauses 7.1.1 to 7.1.6.

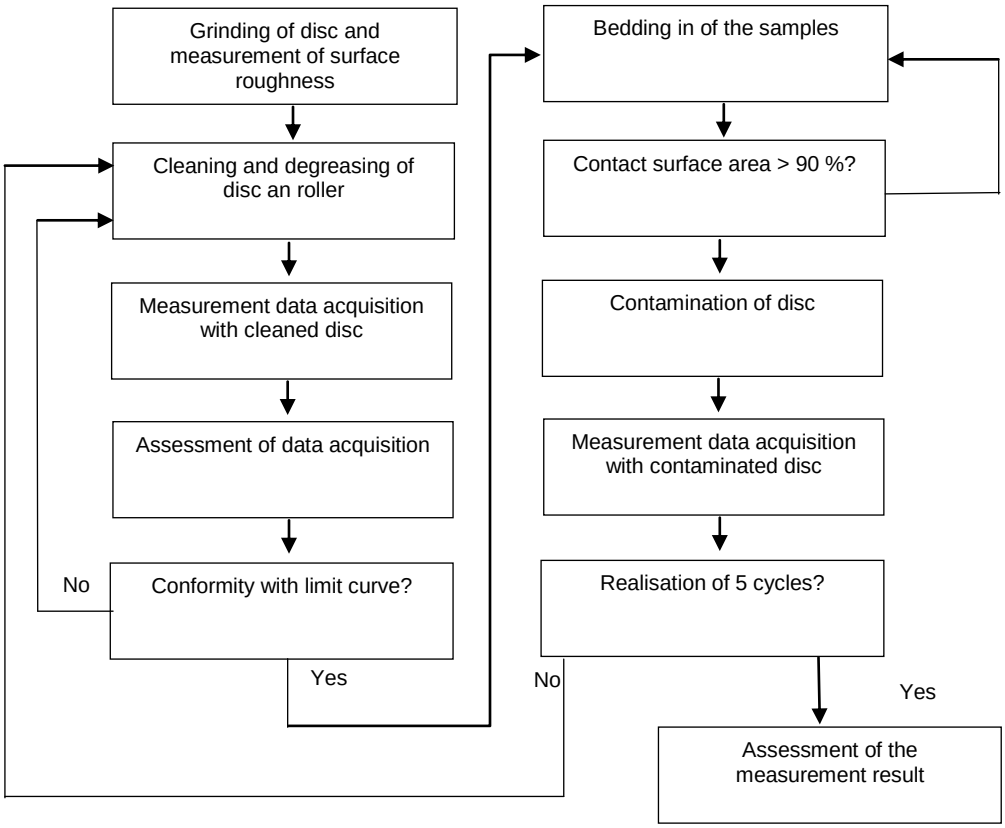

Figure 4: Flow chart of the test program

7.1.1 Grinding of disc and measurement of surface roughness

Before the first test of each pair of friction element samples the disc shall be grinded and the surface roughness R_z (maximum height of profile) shall be lower than or equal to 12 µm.

7.1.2 Cleaning and degreasing of disc and roller

The disc shall be cleaned and degreased with emery paper of grade 180, cloths in micro-fibres and of water/spray acetone in order to remove the residual material and satins from previous tests.

The roller and the surface of the carbon brush shall be cleaned and degreased in order to remove dust particles adhering to the surface.

7.1.3 Cutting of the samples

The cutting of samples shall be carried out without lubrication. The samples shall be cut along the friction surface of the friction element. The friction surface of the samples shall be the one which was originally the closest to the friction surface of the friction element in order to maintain the original application orientation of the material. The sample dimensions are provided in figure 5.

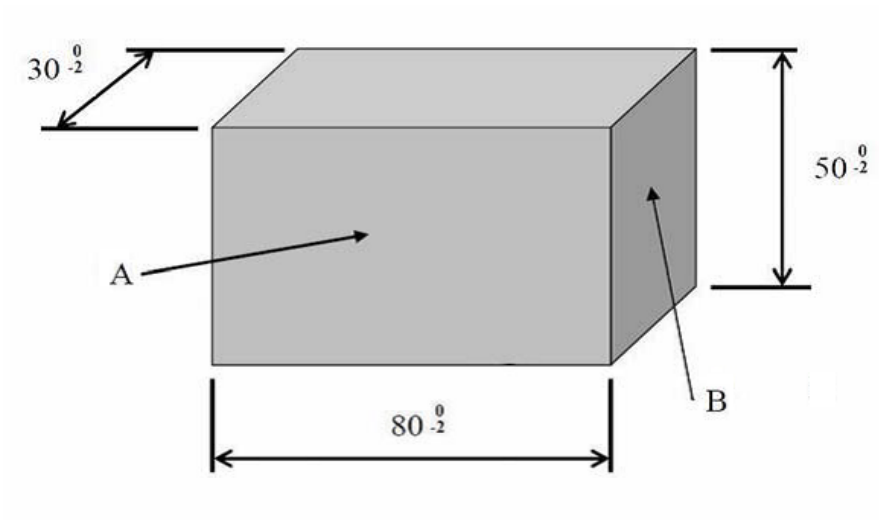

Key

A Friction surface of a sample

B Other surface

Figure 5: Sample

7.1.4 Bedding in of samples

For each cycle two new samples shall be bedded in. The bedding in shall be performed by stop brakings on the cleaned and degreased disc under the following conditions:

- Speed of 100 km/h in the centre of the samples' friction surface
- Braked mass of 0,41 t
- Surface pressure of 40 N/cm^2

The bedding in shall achieve a contact surface area of more than 90 %.

7.1.5 Contamination of disc

The disc shall be contaminated by continuous braking under the following conditions:

- Speed of 70 km/h in the centre of the samples' friction surface
- Brake torque of 51 Nm
- The contamination phase ends as soon as the disc temperature has reached 400 °C or after 2 400 s of continuous braking

Before carrying out the measurement as described in clause 7.1.6 the disc shall be cooled down below 40 °C.

7.1.6 Measurements

The measurement of the impedance shall be carried out with a measurement set up as schematically described in figure 6.

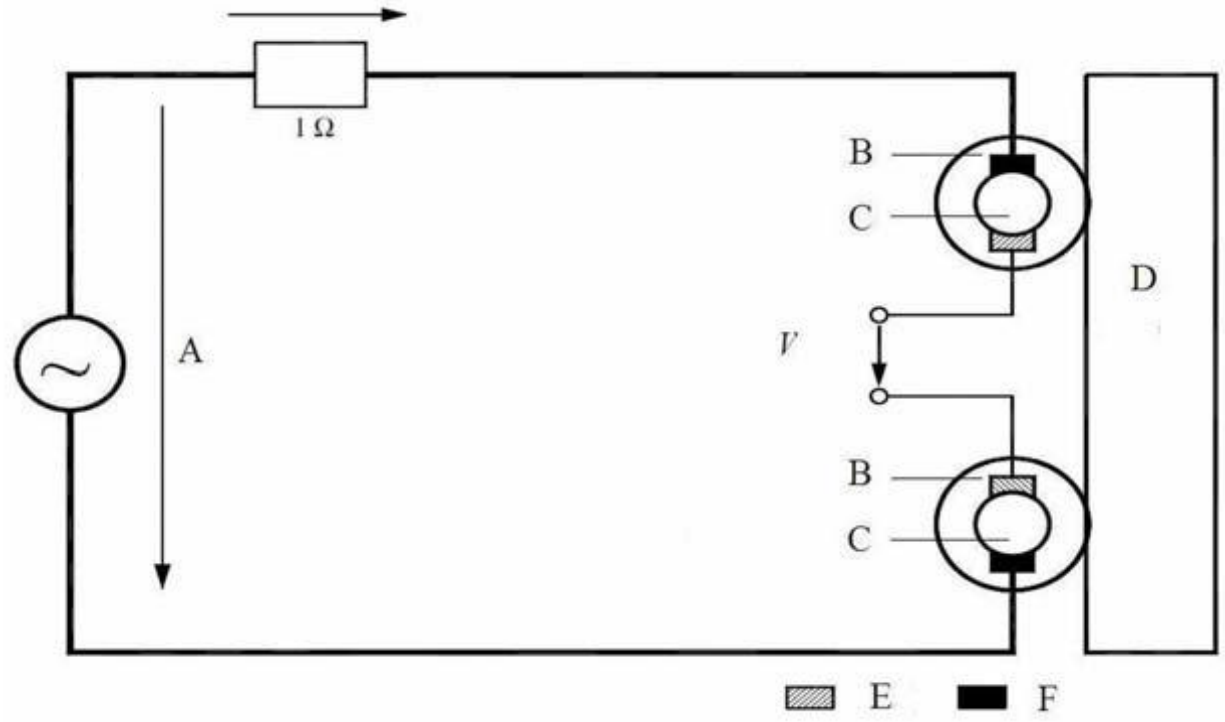

Key

A Applied voltage (electrical cycle)

B Roller made of rail steel

C Shaft made of copper

D Disc made of wheel steel (clean/contaminated)

E Carbon brush – measured voltage

F Carbon brush – applied voltage

V Measured voltage

Figure 6: Schematic diagram of the measurement set up

The electrical contact to the disc is achieved by means of two rollers with a contact force of 14 N each (view of rollers, shaft and brushes in figure 6 are rotated by 90°).

The impedance measurement

- of the cleaned disc and
- of the contaminated disc

relates to four different measuring traces equally distributed over the radius in the contaminated area. In accordance with figure 4 five measurement cycles shall be conducted, so that the impedance of 20 traces is measured at a total.

The impedance on each trace is measured both statically and dynamically by applying the electrical cycle as defined in figure 7. During the dynamical measurement the disc shall rotate at a speed of 60 rpm.

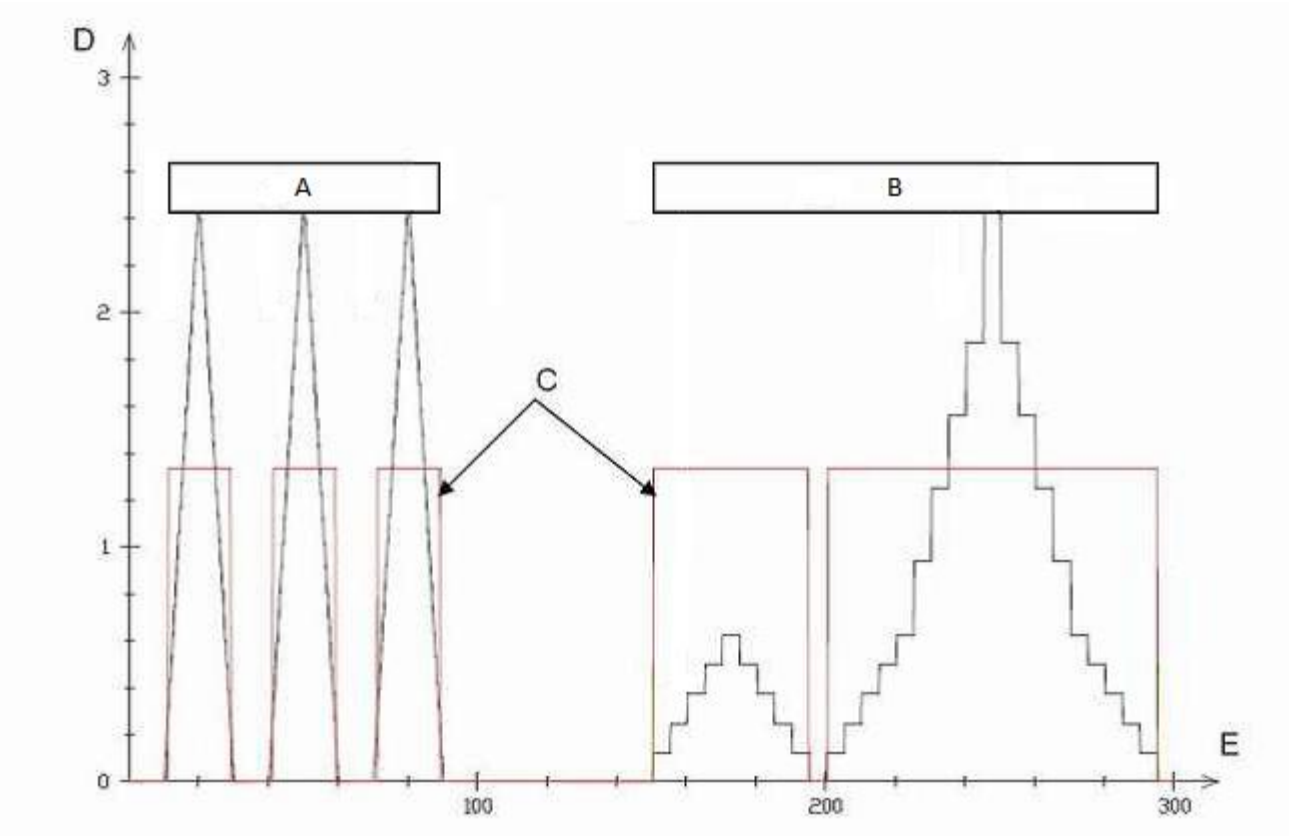

Key

A Static tests B Dynamic tests C Area for measurements

D Applied voltage [V] E Time [s]

Figure 7: Electrical cycle

The resulting current and voltage are measured by a four-wire impedance measurement method and digitalized. The frequency of applied voltage and current is set to 42 Hz. A summation and a verified sliding mean value averaging provide a new impedance value every 10 ms.

7.2 Assessment of the measurement results

An automatic evaluation of the results shall be carried out.

The (several hundred thousand) impedance values obtained during the course of the measurements shall be allocated to the impedance classes indicated as ‘B’ in figures 8 and 9. The total number of impedance values of each impedance class shall be compared with the limit values indicated as ‘C’ in figures 8 and 9.

The number of impedance values measured with the cleaned disc shall be lower in each impedance class than the corresponding limit values as set out in figure 8. If the limit values are not respected, the cleaning of the disc shall be carried out once again as described in figure 4.

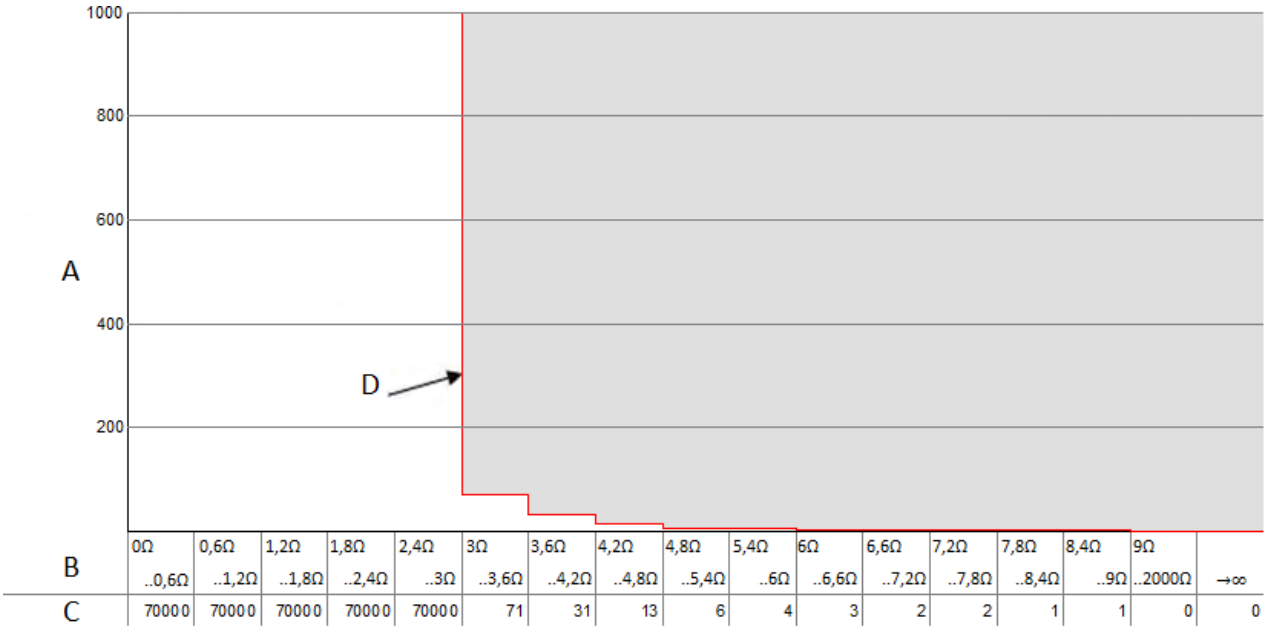

Key

A Frequency distribution of impedance per class

B Impedance classes

C Limit values of frequency distribution of impedance per class

D Limit curve

Figure 8: Limit values per impedance class for cleaned disc

The number of impedance values measured with the contaminated disc shall be lower in each impedance class than the corresponding limit values as set out in figure 9.

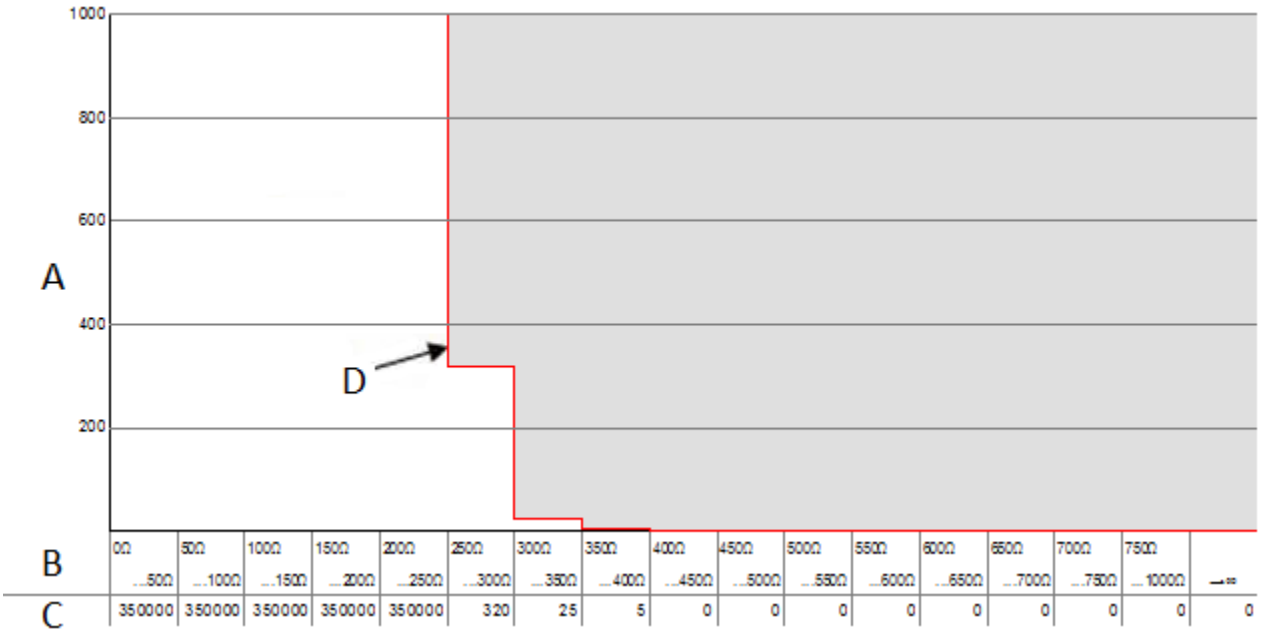

Key

A Frequency distribution of impedance per class

B Impedance classes

C Limit values of frequency distribution of impedance per class

D Limit curve

Figure 9: Limit values per impedance class for contaminated disc

8. SUITABILITY FOR SEVERE ENVIRONMENTAL CONDITIONS

The suitability of the friction element acting on wheel tread brakes for severe environmental conditions shall be tested in accordance with the test procedures set out in sections 8.1 or 8.2. The corresponding terms, definitions and abbreviations are explained in sections 2 and 3.

Cast iron brake blocks are deemed to be suitable for severe environmental conditions.

8.1 Test run

8.1.1 Test program to demonstrate the braking properties under severe environmental conditions

The goal of this test run is to compare the results of tests without snow fly-off ('reference tests') with those with snow fly-off ('winter tests') and to determine the braking properties of friction elements acting on wheel tread brakes for severe environmental conditions under real conditions of use.

'Reference tests' and 'winter tests' shall be performed consecutively within one single period of up to 4 weeks. A running period of at least 10 min is to be observed between brake applications, with a maximum of 4 brake applications performed per hour.

The brake initiation speeds shall be

- 60 km/h (for information purposes, to monitor the plausibility and comparability of the efficiency between 'reference tests' and 'winter tests'),
- if the maximum speed is 100 km/h or more: 85 % of the intended maximum speed but not more than 100 km/h, and
- 100 % of the intended maximum speed

respectively.

The tests shall be performed…

- …with a train consisting of one locomotive and 5 wagons fulfilling the following:
  - The locomotive shall have disconnected dynamic and indirect braking.
  - The maximum dynamic mass of the locomotive shall be lower than 100 t.
  - The test wagons shall be of the same design with the same equipment and have an 'open' bogie design e.g. Y25.
  - The wheelset load when empty (without payload) shall be max. 7 t.
  - The arrangement of the friction elements shall be the one with the lowest intended specific pressure at emergency brake.
  - The emergency brake shall be applied.
  - The bedding in shall achieve a contact surface area of more than 85 %.

- …on lines with mean gradient over the stopping distance lower than 3 ‰; maximum gradient lower than or equal to 5 ‰ and curve radii higher than or equal to 1000 m
- …under the following environmental conditions:
  - ‘Reference test’: No snow fly-off (snow level 0, see figure 10) at external temperatures of up to + 5 °C.
  - ‘Winter tests’: During the winter semester with snow on the lines and with snow fly-off (snow level 3 to 5, see figures 11 and 12) at external temperatures between zero and -10 °C.

Figure 10: Reference test (snow level 0)

Figure 11: Winter test (snow level 2 to 3)

Figure 12: Winter test (snow level 4 to 5)

The number of ‘reference tests’ shall be at least 8 and maximum 20 for each brake initiation speed (60 km/h excluded) whereby the quotient of the standard deviation and the average braking distance shall not exceed 10 %.

The number of ‘winter tests’ shall be at least 8 (60 km/h excluded) whereby the quotient of the standard deviation and the average braking distance shall not exceed 20 % to ensure that the braking distance is representative for the assessment.

The following values shall be measured:

- Speed
- Braking distance
- Time
- Brake pipe pressure
- External temperature

8.1.2 Values to be determined in order to define the area of use

The average braking distances of the ‘winter tests’ at each speed and the average braking distances of the ‘reference tests’ shall be determined.

8.2 Dynamometer test

8.2.1 Test program to demonstrate the braking properties under severe environmental conditions

The dynamometer test program to demonstrate the extreme winter braking properties is set out in table 6 and table 7 and is only applicable if the friction element…

- …is intended to be used in subsystems which fall under the following scope:
  - Nominal wheel diameters of 680 mm to 920 mm
  - Friction element configuration
    - 1Bg (if the test was performed in configuration 1Bg or 2Bgu)
    - 1Bgu (if the test was performed in configuration 1Bgu or 2Bgu)
    - 2Bg (if the test was performed in configuration 2Bg or 2Bgu)
    - 2Bgu (if the test was performed in configuration 2Bgu)
  - Mass per wheel ≥ 1.8 t
- …complies with one of the following cases of the mean dynamic friction coefficient as determined in accordance with section 4.2 point b):

Table 5: Cases of the mean dynamic friction coefficient

Case	Mean dynamic friction coefficient	Total F_B per wheel	Initial speed
		F_B	v
		[kN]	[km/h]
1	$0,28 < \mu_m < 0,32$	9	100
2	$0,27 < \mu_m < 0,31$	9	120
3	$0,17 < \mu_m < 0,19$	16	100
4	$0,16 < \mu_m < 0,18$	16	120

To demonstrate the extreme winter braking properties of friction elements complying with cases 1 and 2 of table 5 the test program of table 6 shall be applied, for friction elements complying with cases 3 and 4 of table 5 the test program of table 7 shall be applied.

Table 6: Dynamometer test program – friction elements cases 1 and 2

Friction element configuration	1Bg, 1Bgu, 2Bg or 2Bgu
Wheel type	In conformity with EN 13979-1
Wheel diameter	Ø X ± 5 mm last machining size before wheel is fully worn to EN 13979-1

No. of brake application					**Initial speed**	**Total FB per wheel**	**Initial temp.**	**Mass to brake per wheel**	**Remarks**
					v	F_B	Θ_0	m_{1W}	
					[km/h]	**[kN]**	**[°C]**	**[t]**	
R.1 - R.X					100	12	20 to100	7,5	Brake applications to rest under dry conditions to allow bedding of the fric tion elements up to a contact pattern of 100 % is reached
R.X + 1 to R.X + 20					100	12	20 to 100	2,5	20 brake applications to a stop (dry)
1 to 5					100	9	-5 to 60	2,5	Conditioning
6	8	10	12	14	100	9	50 to 60	2,5	Dry brake applications, warm
7	9	11	13	15	120			2,5	
16	18	20	22	24	100	9	-5 to -3	2,5	Dry brake applications, cold (reference brake applications)
17	19	21	23	25	120			2,5	
									Test snow machine and snow quality
26 to 28					120	9	-5 to 90	2,5	Conditioning
a29	a33	a37	a42	a46	20				Cooling, dry to -3 °C
b29	b33	b37	b42	b46	100				Rotating, dry, over 240 s
c29	c33	c37	c42	c46	100				Rotating, with artificial snow over 340 s
29	33	37	42	46	100	9		2,5	Braking with artificial snow
30	34	38	43	47	120	9	-5 to 90	2,5	Conditioning, dry

No. of brake application					Initial speed	Total FB per wheel	Initial temp.	Mass to brake per wheel	Remarks
					v	F_B	Θ_0	m_{1W}	
					[km/h]	[kN]	[°C]	[t]	
a31	a35	a39	a44	a48	20				Cooling, dry to -3 °C
b31	b35	b39	b44	b48	120				Rotating, dry, over 240 s
c31	c35	c39	c44	c48	120				Rotating with artificial snow over 900 s
31	35	39	44	48	120	9		2,5	Braking with artificial snow
32	36	40	45	49	120	9	-5 to 90	2,5	Conditioning, dry
		41			120	9	-5 to 90	2,5	Conditioning, dry

Table 7: Dynamometer test program – friction elements cases 3 and 4

Friction element configuration	1Bg, 1Bgu, 2Bg or 2Bgu
Wheel type	In conformity with EN 13979-1
Wheel diameter	Ø X ± 5 mm last machining size before wheel is fully worn to EN 13979-1

No. of brake application					Initial speed	Total FB per wheel	Initial temp.	Mass to brake per wheel	Remarks
					v	F_B	Θ_0	m_{1W}	
					[km/h]	[kN]	[°C]	[t]	
R.1 - R.X					100	30	20 to100	7,5	Brake applications to rest under dry conditions to allow bedding of the friction elements up to a contact pattern of 100 % is reached
R.X + 1 to R.X + 20					100	30	20 to 100	2,63	20 brake applications to a stop (dry)
1 to 5					100	16	-5 to 60	2,63	Conditioning
6	8	10	12	14	100	16	50 to 60	2,63	Dry brake applications, warm
7	9	11	13	15	120			2,63	
16	18	20	22	24	100	16	-5 to -3	2,63	Dry brake applications, cold (reference brake applications)
17	19	21	23	25	120			2,63	

No. of brake application					Initial speed	Total FB per wheel	Initial temp.	Mass to brake per wheel	Remarks
					v	F_B	Θ_0	m_{1W}	
					[km/h]	[kN]	[°C]	[t]	
									Test snow machine and snow quality
26 to 28					120	16	-5 to 90	2,63	Conditioning
a29	a33	a37	a42	a46	20				Cooling, dry to -3 °C
b29	b33	b37	b42	b46	100				Rotating, dry, over 240 s
c29	c33	c37	c42	c46	100				Rotating with artificial snow over 340 s
29	33	37	42	46	100	16		2,63	Braking with artificial snow
30	34	38	43	47	120	16	-5 to 90	2,63	Conditioning, dry
a31	a35	a39	a44	a48	20				Cooling, dry to -3 °C
b31	b35	b39	b44	b48	120				Rotating, dry, over 240 s
c31	c35	c39	c44	c48	120				Rotating with artificial snow over 900 s
31	35	39	44	48	120	16		2,63	Braking with artificial snow
32	36	40	45	49	120	16	-5 to 90	2,63	Conditioning, dry
		41			120	16	-5 to 90	2,63	Conditioning, dry

During the tests described in tables 6 and 7 the following conditions shall be respected:

- The cooling air speed shall be as set out in table 8.

Table 8: Cooling air speed

	Speed simulated on the test bench [km/h]		Speed of the cooling air [km/h]	
	Under dry conditions	**With snow**	**Under dry conditions**	**With snow**
During braking	v	v	25	25
Between the brake applications	v	v	25	25

- The brake build-up time shall be 8 s ± 0,2 s.
- During bedding-in the following minimum numbers of brake stops shall be carried out: 40 for organic friction elements and 80 for sintered friction elements.
- All test equipment shall initially have a homogeneous temperature of -7 °C ± 2 °C. The test chamber temperature shall be -7 °C ± 2 °C. The required temperature should therefore be reached in the test chamber at least 12 h before the start of the programme (brake application n° 1).
- The snow shall be dry. Its calculated weight shall be 45 - 52 g per 250 ml measuring cup. It shall fall apart after being pressed in a palm. During the cooling periods with artificial snow and the subsequent brake applications with artificial snow, the flow of artificial snow shall not be interrupted.
- Five valid brake applications under snow (at 100 km/h and 120 km/h) are required.
- Any irregularities during testing on the friction element and the wheel contact surfaces are to be recorded and documented.
- If interruptions occur between brake applications n° 29 to 49 (e. g. due to equipment problems as a result of iced-over snow nozzles), the programme is to be continued by repeating the last conditioning brake application and the subsequent cooling operations. These interruptions are to be recorded in the test report.

8.2.2 Values to be determined in order to define the area of use

The test program shall be carried out three times and the establishment of the suitability shall be done for a maximum test speed of 100 km/h and 120 km/h as follows:

- For a maximum speed of 100 km/h the deviation of the average value of the measured stopping distances s_1 under snow (brake application n° 29, 33, 37, 42 and 46) from the average value of the measured stopping distances s_1 under dry conditions (brake application n° 16, 18, 20, 22 and 24) shall be determined.
- For a maximum speed of 120 km/h the deviation of the average value of the measured stopping distances s_1 under snow (brake application n° 31, 35, 39, 44 and 48) from the average value of the measured stopping distances s_1 under dry conditions (brake application n° 17, 19, 21, 23 and 25) shall be determined.

9. THERMO MECHANICAL CHARACTERISTICS

The thermo mechanical analysis to be performed at subsystem level (freight wagon) is specified in the point 4.2.4.3.3 of the WAG TSI for the brake system and in the point 4.2.3.6.3 of the WAG TSI for the wheel, taking into account the area of use of the freight wagon.

At the interoperability constituent level (friction element for wheel tread brakes) it is allowed to take into account for the brake application No 129 of Table 1 a more demanding slope than those suggested in the column Remarks; the slope taken into account has then to be recorded in the technical documentation as part of the area of use of the friction element for wheel tread brakes.

At the interoperability constituent level (friction element for wheel tread brakes), in case the manufacturer chooses to perform the test to simulate ‘locked brake’ as specified in FprEN 16452:2014, the result of this test has to be recorded in the technical documentation as part of the area of use of the friction element for wheel tread brakes.”

46. New Appendix O, point 4.2 letter g), last sentence: a footnote is added linked to the text "FprEN 16452:2014". The footnote reads:

"The reference will be changed to EN 16452:xxxx once this standard is published. FprEN is a stable version submitted to the formal vote within CEN."

47. New Appendix O, section 9, last paragraph: a footnote is added linked to the text "FprEN 16452:2014". The footnote reads:

"The reference will be changed to EN 16452:xxxx once this standard is published. FprEN is a stable version submitted to the formal vote within CEN."

48. All footnotes throughout the document are (re)numbered in ascending logical order.

****